ENERGYDOCK

STANDARD RANGE

Standard Range Level 4

TECHNICAL DATA SHEET
WITH INSTALLATION INSTRUCTIONS

ENERGYDOCK STANDARD LEVEL 4	
Product Code	STDLEVEL4
Weight	73.1kg
Dimensions	1440mm x 550mm x 200mm

Manufactured by SPECIALIZED SOLAR SYSTEMS
43 Ossie Urban Street, Tamsui Industria, George, South Africa
+27 (0)44 878 1126 | www.specializedsolarsystems.co.za | info@specializedsolarsystems.co.za

To be completed by Distributor:

IMPORTANT INFORMATION

- PROJECT No.
- CLIENT NAME
- CLIENT CONTACT DETAILS
- DATE PURCHASED/INSTALLED
- SERIAL NUMBER of UNIT
- SSS REPRESENTATIVE

Please retain this booklet as proof of your warranty.

If this section has not been completed by a registered SSS Distributor, please submit a copy of the above to the following email address to ensure that your warranty will be valid: *info@specializedsolarsystems.co.za*

The complete Energydock Range consists of the following products:

DC HOME SYSTEM	0.64 kWh
MOBILE UPS	3 kVA / 3 kWh
STANDARD RANGE LEVEL 1 (PV ready)	3 kVA / 3 kWh
STANDARD RANGE LEVEL 3 (PV ready)	5 kVA / 5 kWh
STANDARD RANGE LEVEL 4 (PV ready)	6 kVA / 5.4 kWh
STANDARD RANGE LEVEL 5 (PV ready)	6 kVA / 9.6 kWh
PREMIUM RANGE LEVEL 4	5 kVA / 5 kWh
PREMIUM RANGE LEVEL 5	5 kVA / 10 kWh

Manufactured by SPECIALIZED SOLAR SYSTEMS
43 Ossie Urban Street, Tamsui Industria, George, South Africa
+27 (0)44 878 1126 | www.specializedsolarsystems.co.za | info@specializedsolarsystems.co.za

TABLE OF CONTENTS

1.	Introduction	page 3
2.	Technical Specifications	page 5
3.	Default settings for Victron Inverter	page 7
4.	Safety Instructions	page 9
5.	Installing the Unit in Position	page 10
6.	System Architecture	page 11
7.	Wiring of the Unit	page 12
8.	How to Switch the System On	page 13
9.	Wifi Connection	page 14
10.	Solar Panel Installation	page 14
11.	Connecting the Solar Array to the Standard Range Unit	page 15
12.	Testing	page 15
13.	Connecting Additional Batteries in Parallel	page 15
14.	Frequently Asked Questions	page 16
	Quality Control and Sign-Off	page 18

Manufactured by SPECIALIZED SOLAR SYSTEMS
43 Ossie Urban Street, Tamsui Industria, George, South Africa
+27 (0)44 878 1126 | www.specializedsolarsystems.co.za | info@specializedsolarsystems.co.za

STANDARD RANGE LEVEL 4

INTRODUCTION

Manufactured and assembled in South Africa by Specialized Solar Systems, the Energydock Standard Range Level 4 offers a pre-built and compact energy solution that includes a Victron Multi RS Dual Tracker inverter/charger with a 'prime-life' lithium iron phosphate ($LiFePO_4$) battery.

This Energydock range is PV or solar panel-ready as the RS Multi inverter has a built-in 450/100 dual tracker MPPT. The Energydock Standard Range has a wide variety of applications and can be used in a hybrid, off-grid or even a backup (UPS) configuration for your home and business.

The built-in Victron Cerbo GX device offers "at-a-glance" live system performance information and allows one to view and control the connected energy system's devices remotely. Optimization, energy saving and energy security are based on good remote programming Detailed system logging and analysis are also freely available on the VRM online portal, whereby you can connect to your system remotely.

The Standard Range includes AC and DC protection with safety features, is pre-wired (interconnected) for easy installation and pre-programmed for optimal performance. The Standard Range offers a safe and complete energy solution for your home or office, as all wires and connections are housed within the slim enclosure and no live wires are exposed.

This Energydock Range has many additional features, such as:

- Two AC outputs
- PowerControl – maximum use of limited AC power
- PowerAssist – extended use of AC input current
- Programmable components, relay and analog or digital inputs
- Built-in battery monitoring system (BMS)
- High efficiency
- Frequency shift function
- Three phase configuration
- Auto start function for a generator
- Alarm settings
- Full remote management.

Please ask the sales representative to explain these functions.

Manufactured by SPECIALIZED SOLAR SYSTEMS
43 Ossie Urban Street, Tamsui Industria, George, South Africa
+27 (0)44 878 1126 | www.specializedsolarsystems.co.za | info@specializedsolarsystems.co.za

STANDARD RANGE LEVEL 4

COMPONENTS

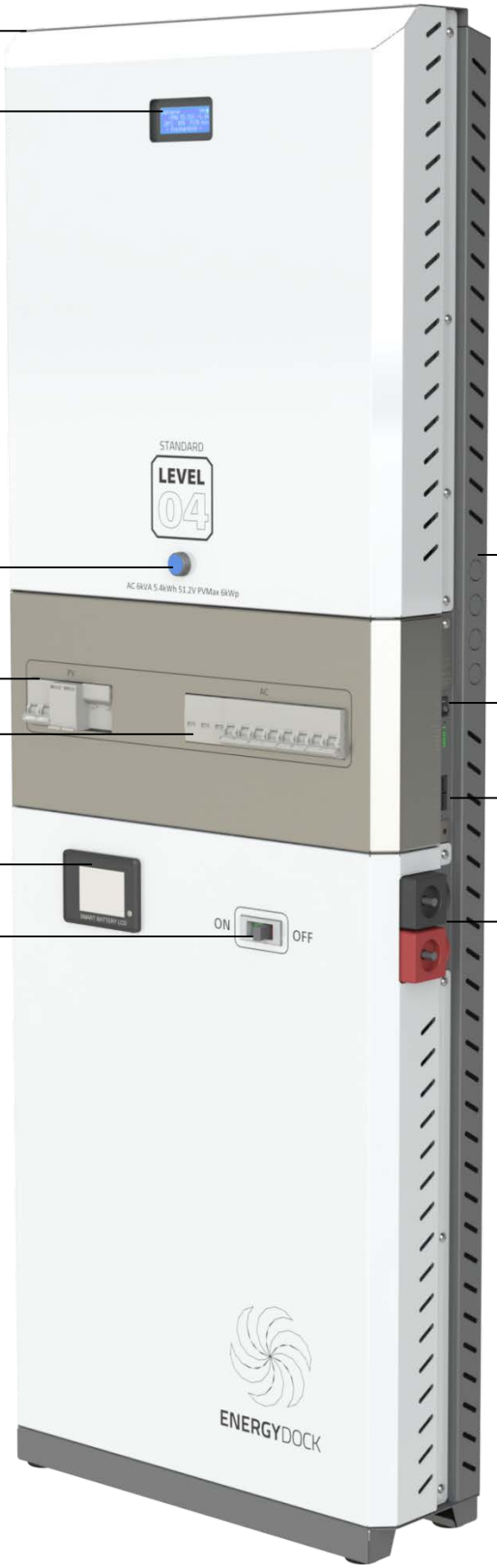

SERIAL NUMBER

INVERTER SCREEN

INVERTER ON/OFF SWITCH

PV CIRCUIT BREAKERS

AC 1&2 IN/OUT CIRCUIT BREAKERS & INDICATOR LIGHTS

BMS TOUCH SCREEN

DC MAIN BATTERY CIRCUIT BREAKER

PRE-CUT HOLES FOR INPUT & OUTPUT GLANDS

BMS ON/OFF

BATTERY PARALLEL COMMUNICATION PORTS

BATTERY PARALLEL CONNECTION TERMINALS

Manufactured by SPECIALIZED SOLAR SYSTEMS
43 Ossie Urban Street, Tamsui Industria, George, South Africa
+27 (0)44 878 1126 | www.specializedsolarsystems.co.za | info@specializedsolarsystems.co.za

2. TECHNICAL SPECIFICATIONS

2.1 Standard Level 4 General Specifications

STANDARD LEVEL 4 GENERAL SPECIFICATIONS	
Product code	STDLEVEL4
Weight	73.1kg
Dimensions	1440mm (l) x 550mm (w) x 200mm (d)
Enclosure	Floor or wall mountable metal enclosure
Installation	Indoor or protected undercover use.

2.2 Inverter Specifications

VICTRON MULTI RS SOLAR 48/6000 DUAL TRACKER INVERTER SPECIFICATIONS	
PowerControl & PowerAssist	Yes
Transfer switch	50 A
Maximum AC input & pass through current	50 A
Auxiliary output	Yes
Inverter	
DC Input voltage range	38 – 62 V
AC output voltage / frequency	230 VAC ± 2 % / 50 Hz ± 0,1 %
Maximum continuous inverter current	25 A
Continuous output power at 25°C	Increases linearly from 4800 W at 46 VDC to 5300 W at 52 VDC
Continuous output power at 40 °C / 65 °C	4500 W / 3000 W
Peak power	9000 W for 3 seconds, 7000 W for 4 minutes
Short circuit output current	45 A
Maximum AC output overcurrent protection	30 A
Efficiency	96.5% at 1 kW load / 94% at 5 kW load
Zero load power consumption	20 W
Low battery shutdown / restart	37.2 V (adjustable) / 43.6 V (adjustable)
Charger	
AC Input voltage range / frequency	187-265 VAC / 45 – 65 Hz
Programmable voltage charge range	36 – 60 V
Maximum charge current from AC	88 A @ 57.6 VDC
Total maximum charge current (AC + PV)	100 A DC
Battery temperature sensor	Yes
Battery voltage sense	Yes

Manufactured by SPECIALIZED SOLAR SYSTEMS
43 Ossie Urban Street, Tamsui Industria, George, South Africa
+27 (0)44 878 1126 | www.specializedsolarsystems.co.za | info@specializedsolarsystems.co.za

Solar	
Maximum open circuit PV array voltage	450 V
Start-up voltage	120 V
MPPT operating voltage range	80 – 450 V
Number of trackers	2
Maximum operational PV input current limit	13 A
Maximum PV short circuit current	16 A
Maximum DC solar charging power	6000 W total – 3000 W per tracker
Maximum PV array size	7200 Wp (450 V x 20 A)
Earth leakage trip level	30 mA
Isolation fail level	100 kΩ
General	
Programmable relay	Yes
Data communications ports	VE.Direct port, VE.Can port and Bluetooth
Bluetooth frequency and power	2402 – 2480 Mhz, 4 dBm
Programmable ports	x 2
Remote on/off	Yes
Operating temp. range	-40 to +55° C (fan assisted cooling)
Maximum altitude	2000m
Humidity (non-condensing)	Maximum 95%

2.3 Battery Specifications

5.4 kWh $LiFePO_4$ BATTERY SPECIFICATIONS	
Battery type	Grade A $LiFePO_4$ Prismatic Cells
Nominal voltage	51.2 VDC
Nominal capacity	106 Ah
Total energy capacity	5.40 kWh
Energy capacity at 80% DoD	4.32 kWh
Standard charge current	50 A
Maximum charge current	80 A
Charge voltage Bulk/Absorb	56.2 VDC
Float voltage	56.0 VDC
Recommended constant discharge	50 A
Maximum discharge current	100 A
Discharge cut-off voltage	48 V @ 0.005C
BMS	Charge: 100A / Discharge: 125A
Protection	100 A circuit breaker

Manufactured by SPECIALIZED SOLAR SYSTEMS
43 Ossie Urban Street, Tamsui Industria, George, South Africa
+27 (0)44 878 1126 | www.specializedsolarsystems.co.za | info@specializedsolarsystems.co.za

Minimum cycle life	4000 cycles @ 0.5C 80% depth of discharge
Operating temperature – Charge/Discharge	0 to 45° C / 0 to 55° C
Maximum parallel batteries	4 – Master and slave
Maximum discharge per additional battery	100A / 150A / 200A / 270A
CAN-bus communication	Yes, Victron GX ready

The following algorithm has been programmed into the energy system battery:

- Cell over-discharge protection.
- Battery over-discharge protection.
- Cell over-current protection.
- Battery discharge over-current protection.
- Short circuit protection.
- Over / under temperature protection.

3. DEFAULT SETTINGS FOR VICTRON INVERTER

This Standard Level 4 unit has been pre-programmed with the following Inverter settings via the Victron Connect APP. Select settings and then:

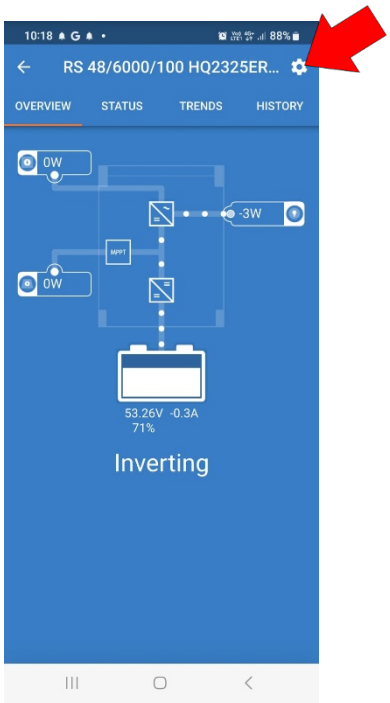

1. **GENERAL page:**
   - 50 Hz
   - Grid – AC input current limit *50 A*
   - Current overruled by remote *ON*

2. **GRID page:**
   - AC low voltage disconnect *205 V*
   - AC low voltage connect *206 V*
   - AC high voltage disconnect *270 V*
   - AC high voltage connect *265 V*
   - UPS function *ON*

3. **BATTERY page**
   - Battery voltage *48 V*
   - Battery capacity *106 Ah*
   - Maximum charge current *80 A*
   - Battery preset *USER DEFINED*
   - Battery chemistry *$LiFePO_4$*
   - Expert mode *OFF*
   - BMS control *YES*
   - Low shutdown on SOC *OFF*

Manufactured by SPECIALIZED SOLAR SYSTEMS
43 Ossie Urban Street, Tamsui Industria, George, South Africa
+27 (0)44 878 1126 | www.specializedsolarsystems.co.za | info@specializedsolarsystems.co.za

- Dynamic cut off *ENABLED*
  - Discharge current 1A *49 V*
  - Discharge current 48 A *48.5 V*
  - Discharge current 134 A *48 V*
  - Discharge current 384 A *47.5 V*
- Low battery restart and alarm *49 V*
- Charge detect *50 V*
- Absorption voltage *56.2 V*
- Float voltage *56 V*
- Storage voltage *54 V*
- Equalization *DISABLED*
- Temperature compensation *DISABLED*
- Low temperature cut off *DISABLED*

4. SOLAR page

- Partial shading detection *ENABLED*

5. INVERTER page

- Output voltage *230 V*
- Ground relay *ON*

6. ON/OFF page *ON*

7. RELAY page *INVERTING*

***8.* AUX INPUT page** *UNUSED*

9. DISPLAY page

- Backlight *ALWAYS ON*
- Temperature unit *CELSIUS*

10. AC INPUT CONTROL page *DISABLED*
(speak to your service technician)

11. ESS page

- ESS mode *KEEP BATTERIES CHARGING*
  (speak to your service technician)

12. SYSTEM page

- Configuration *STAND ALONE*
- Phase selection *L1*
- Prevent CAN network islanding *OFF*
- Continue with missing phase *OFF*

Manufactured by SPECIALIZED SOLAR SYSTEMS
43 Ossie Urban Street, Tamsui Industria, George, South Africa
+27 (0)44 878 1126 | www.specializedsolarsystems.co.za | info@specializedsolarsystems.co.za

4 SAFETY INSTRUCTIONS

4.1 General safety instructions

Please read all documentation supplied with this product first so that you are familiar with the safety indicators and instructions before using this product. This equipment should be used for the designated application only.

Warning: Danger and electrical shock

- This product is used in combination with a permanent energy source (battery). Even if the equipment is switched off, a dangerous electrical voltage can occur at the input or output terminals. Always switch the AC power OFF and disconnect the battery before any maintenance is carried out.

- Never use the product at sites where a gas or a dust explosion could occur. The product is not intended for use by persons (including children) with reduced physical, sensory, or mental capabilities, or with a lack of experience or knowledge.
- An approved service agent must take responsibility for the installation of this product.

4.2 Transport and storage safety instructions

- When transporting or storing the product, ensure that the main supply and the battery leads are disconnected.
- Transport the product in the original packaging only.
- Store all products in a dry environment in a temperature range of 0 to 45°C.

Warning: Do not lift heavy objects without assistance.

- For electrical work, follow the National Wiring Standards and Regulations of South Africa.
- This product is a Safety Class 1 device. The AC input and/or output terminals must be provided with an uninterrupted grounding for safety purposes. The additional grounding point located inside the unit should have a ground conduction of at least 4mm².
- Never replace a protective device with a component of a different kind.
- Before switching the energy system on, first check that the input voltage is correct.
- Ensure that the equipment is used in the correct operating conditions. Never operate in wet or dusty conditions.
- Ensure that there is sufficient free space for ventilation around the installed equipment.
- Install the product in a heat proof environment.
- Ensure that there are no chemicals, plastic pots or curtains in the immediate vicinity of the installation.
- Always ensure that you follow the correct installation video/manual procedures when attempting to install this unit.

Manufactured by SPECIALIZED SOLAR SYSTEMS
43 Ossie Urban Street, Tamsui Industria, George, South Africa
+27 (0)44 878 1126 | www.specializedsolarsystems.co.za | info@specializedsolarsystems.co.za

5. INSTALLING THE UNIT IN POSITION

This unit can be installed as freestanding on the floor if wall space is limited and provided that the floor is level, although this is not recommended. Ideally the unit should be mounted on a wall to avoid moisture and tampering. To install the unit correctly on a wall, please follow the following procedure:

1. Clear the area where the unit is going to be installed.
2. Remove the unit from the wooden container.
3. Remove all consumables from the Consumable Bag.
4. Use the primary bracket as a reference and mark the holes of the desired point of installation.
5. Use a spirit level to ensure that the primary bracket is installed level and correctly.
6. Drill the holes to the required dimensions.
7. Install the primary bracket and fasten it with rawl bolts (the rawl bolts are located in the Consumable Bag).
8. After the rawl bolts are tightened, the unit can be hooked onto the primary bracket.
9. The unit can be hooked to the primary bracket again.
10. The unit is now in position.

Manufactured by SPECIALIZED SOLAR SYSTEMS
43 Ossie Urban Street, Tamsui Industria, George, South Africa
+27 (0)44 878 1126 | www.specializedsolarsystems.co.za | info@specializedsolarsystems.co.za

6. SYSTEM ARCHITECTURE

Please see below an example of the wiring diagram of this unit without the Energydock enclosure:

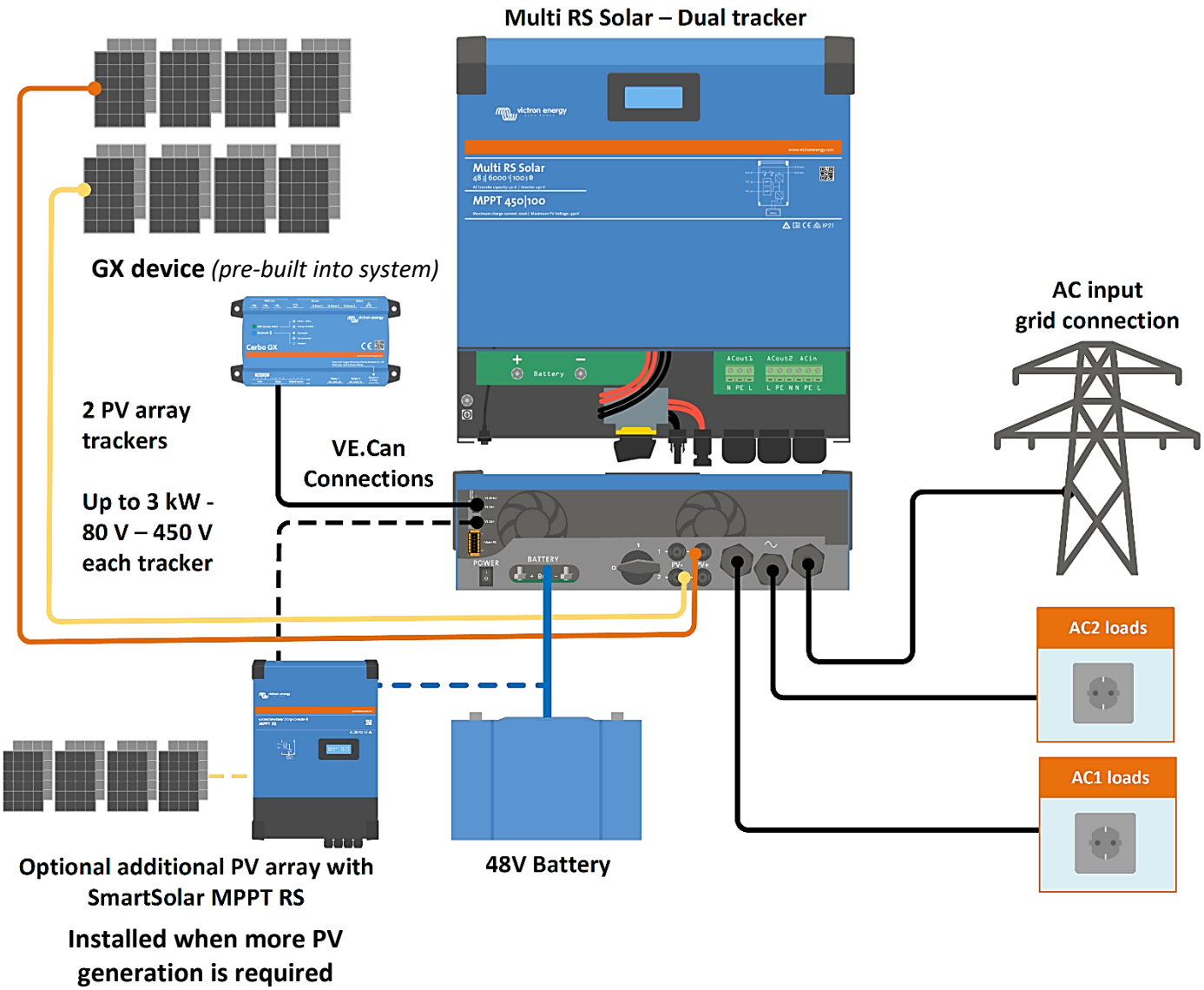

Manufactured by SPECIALIZED SOLAR SYSTEMS
43 Ossie Urban Street, Tamsui Industria, George, South Africa
+27 (0)44 878 1126 | www.specializedsolarsystems.co.za | info@specializedsolarsystems.co.za

7. WIRING OF THE UNIT AND AC CONNECTIONS

Any installation of the Energydock Range should only be done by a certified electrician.

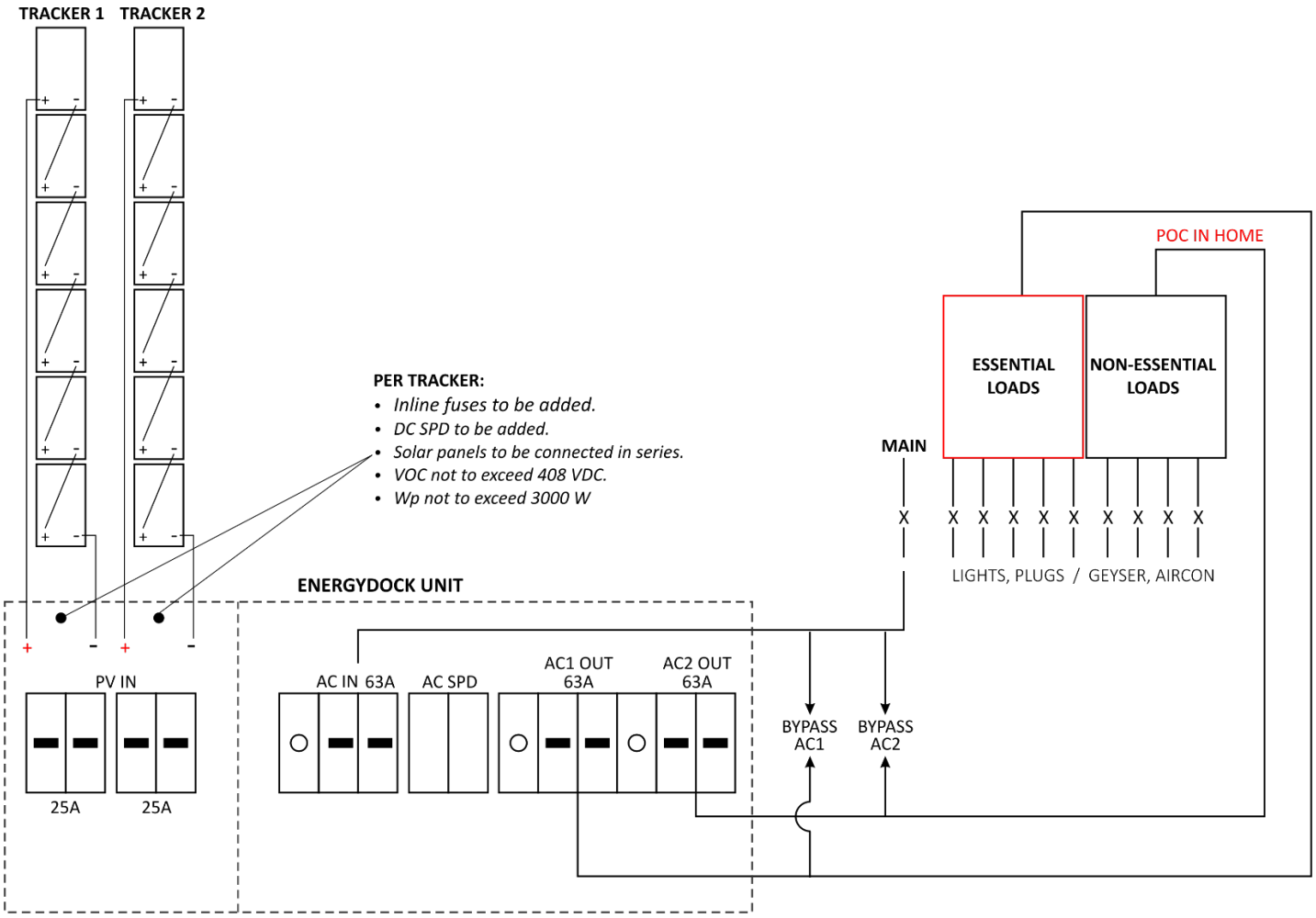

7.1 If connecting AC1 / AC2 output:

- Separate the load in the distribution box to determine essential loads and non-essential loads.
- **NB. Ensure that the neutral for AC1 and AC2 is not common (N must be separated).**
- There must be common earth between AC IN and AC1 / AC2 outputs.
- To utilize the system as a UPS device, only connect AC1 output. For energy security.

Please note that a bypass for AC1 and AC2 could also be installed, if so required.

7.2 For off-grid systems:

- The circuit breaker size will need to be changed. Please enquire from your service technician regarding this.

Manufactured by SPECIALIZED SOLAR SYSTEMS
43 Ossie Urban Street, Tamsui Industria, George, South Africa
+27 (0)44 878 1126 | www.specializedsolarsystems.co.za | info@specializedsolarsystems.co.za

8. HOW TO SWITCH THE SYSTEM ON

The unit has now been installed against a wall and the qualified electrician has connected the AC IN / AC1 OUT / AC2 OUT. Follow the steps below to switch the installed system on:

1. Ensure that the circuit breakers are all in the OFF position.
2. Press the silver button on the Smart BMS screen. There are three pages to view:
    - Summary of battery pack
    - Condition of charge/discharge mosfets
    - Individual battery cell values
3. On page 2 of the BMS screen, confirm that both mosfets are in the "ON" position.
4. Also on page 2, check that the LED screen states "NORMAL" operations.
5. Check that the small white battery dial is set on number 1.
6. Now switch the main BMS switch ON. The battery will reboot, the BMS will indicate number 1and will indicate the condition of the battery with the green lights.
7. Switch the main DC battery circuit breaker into the ON position.
8. Now switch the inverter ON at the small round switch above the circuit breakers. The inverter screen will turn ON.
9. The inverter will now turn ON and AC1 output will now be live. Check the indicator light.
10. Now put the AC IN circuit breaker ON, allowing the power from the grid to the AC IN point.
11. The inverter will now start charging the battery as indicated on the Smart BMS screen. AC2 indicator lights will switch ON.
12. AC IN will also be indicated on the main screen of the inverter.
13. Now you can switch ON AC1 and AC2 circuit breakers, and the load will be supplied via the inverter. Again, monitor the inverter screen to see the values.
14. To test the unit switch off the AC IN circuit breaker and you will notice that AC2 OUT will disconnect but AC1 OUT will stay ON.
15. Ensure that you now have access to the VRM portal by connecting the wifi to the Cerbo GX device. Once this is connected, please download the APP or VRM platform, and confirm you have access to the system's information. Please see the instructions for this process below.

Please contact your service provider to verify that he has access to your unit, and that the system is functioning within the set parameters.

Manufactured by SPECIALIZED SOLAR SYSTEMS
43 Ossie Urban Street, Tamsui Industria, George, South Africa
+27 (0)44 878 1126 | www.specializedsolarsystems.co.za | info@specializedsolarsystems.co.za

9. WIFI CONNECTION

Once the installation of the unit is completed, the wifi can be connected.

- Keep the AC IN circuit breaker in the ON position and AC1/AC2 OUT and the PV circuit breakers in the OFF position.
- Confirm that the inverter indicates that it is ON.
- Now, using your cell phone, go to your "Settings" then to "WIFI". Scan and pick up the unit "HQ number and name" (the name is normally "Cerbo GX").
- Link your phone to the Cerbo wifi.
- Now scan the QR code that is on the unit's enclosure to obtain the password or wifi key for this unit.
- Enter the password or wifi key into your phone.
- The unit is now linked to your phone.
- Using IP address 172.24.24.1, access the Remote Consol of the unit.
- In the Remote Consol, go to "Settings".
- In "Settings" select "WIFI".
- Now chose the selected wifi.
- Scroll to "Password" and enter the password.
- The unit should now connect to the selected wifi.
- Now go back in the Remote Consol to "Device List". At the top of the "Device List" you can confirm if the unit is connected.
- When it is connected, download the VRM Portal (on your computer or the APP).
- Ask your service provider to invite you to your unit's site.
- You will then receive an email inviting you to the site.
- You now have remote access to your unit, and can connect the solar panels next.

10. SOLAR PANEL INSTALLATION

When installing solar panels to the Standard Level 4 unit, it is very important to note the following:

- Please see the technical specifications and data sheet for maximum allowable PV.
- When connecting the solar panels in series, please ensure that the VOC of the solar panels does not exceed 408 VDC.
- The solar panel installer should confirm that the earthing of the solar panels is correctly bonded.
- It is recommended that the cable run from the solar panels has the following included when installed:
  - DC fuses (Inline)
  - DC surge protection
  - DC isolation point
  - The correct cables installed
- The internal MPPT of the inverter is a Victron RS 450/100 dual tracker MPPT.

Manufactured by SPECIALIZED SOLAR SYSTEMS
43 Ossie Urban Street, Tamsui Industria, George, South Africa
+27 (0)44 878 1126 | www.specializedsolarsystems.co.za | info@specializedsolarsystems.co.za

Once the solar panels are installed, and before connecting the solar array to the unit, open the front cover of the Standard unit and ensure that the PV isolator at the bottom of the inverter is in the ON position

11. CONNECTING THE SOLAR ARRAY TO THE STANDARD RANGE UNIT

- When connecting the solar panel array to this Standard Range unit, the PV cable should be connected into the PV or DC circuit breaker as indicated. Please ensure that the polarity is correct prior to connecting. Please also ensure that the system is ON and is reporting to your phone.
- Once the above is completed, switch the PV breaker to the ON position.
- The LED screen, VRM portal or Bluetooth APP will now indicate the MPPT voltage and confirm that the unit is receiving the generated solar power.
- Please let your service technician check that the functionality of the installed system is performing according to its programming and your satisfaction.

12. TESTING

Please instruct your electrician to apply the normal tests for a COC to the unit.

13. CONNECTING ADDITIONAL BATTERIES IN PARALLEL

A maximum of three additional AB5.4K batteries may be connected in parallel to the Standard Level 4. When paralleling these batteries, the capacity *"Amp"* of the BMS will be increased. Only proportional sizes of batteries may be paralleled together. Please note that even though the BMS capacity has increased, the limit to this capacity is as indicated below:

AB5.4K BATTERY				
DESCRIPTION PER UNIT	BATTERY 1	BATTERY 2	BATTERY 3	BATTERY 4
CIRCUIT BREAKER	100 A	100 A	100 A	100 A
RECOMMENDED MAXIMUM DISCHARGE	100 A	150 A	200 A	270 A

Using the above information, and under the assumption that you connect four batteries in parallel, one would assume that you could have the capacity of the BMS x four units and therefore, the four batteries could supply up to 400 Amps. However, this would not be correct. The maximum constant Amp that four batteries could supply would be 270 Amps.

Manufactured by SPECIALIZED SOLAR SYSTEMS
43 Ossie Urban Street, Tamsui Industria, George, South Africa
+27 (0)44 878 1126 | www.specializedsolarsystems.co.za | info@specializedsolarsystems.co.za

13.1 How to do the Parallel Connection

The parallel ports of the battery (*"Battery Parallel IN/OUT"*) are located on the left side panel of this Standard unit (please see page 4) and should be connected as follows:

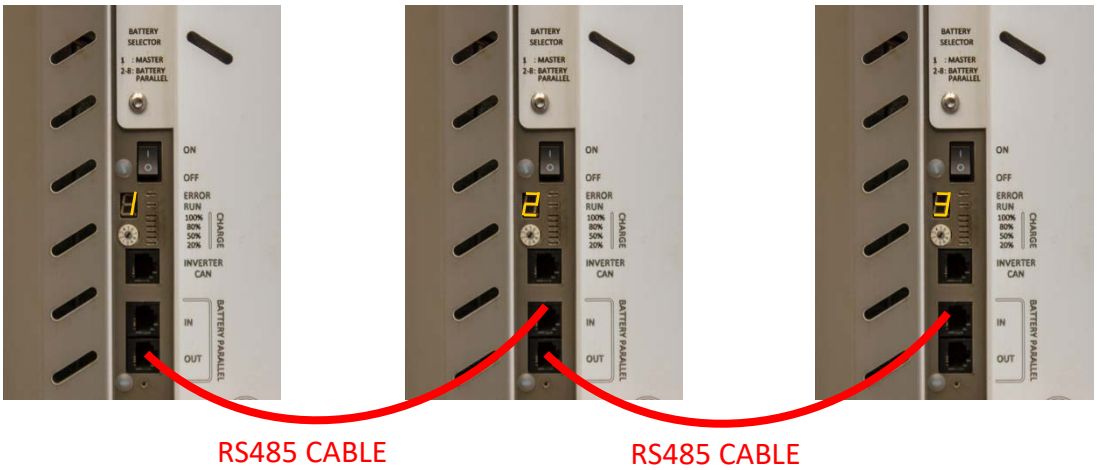

The Master battery (within the Standard unit) will be set to "1" on the Battery Number dial, and the RS485 cable will be plugged into "*OUT*" of the Master battery of the Standard unit and then into *"IN"* of Slave 2 (or Pack 2). Pack 2 will then be set to "*2*" on the Battery Number dial, and then the RS485 should go from "*OUT*" of Pack 2 to "*IN"* of Pack 3 (setting to be put on "*3*" of Pack 3) and the same process with Pack 4. The CAN Coms cable stays in the Master battery only.

If the batteries are connected in parallel, ensure that all the positive and negative cables are connected to a central BUS and that cable thicknesses and lengths are the same.

When connecting the units in parallel, the four BMS's will calculate an average between all the connected batteries' BMS's charge/discharge and SOC and send this information to the GX device.

14. FREQUENTLY ASKED QUESTIONS

Below are is a list of the most common faults that will occur when installing an EnergyDock unit. If the steps in the solution are followed and the fault is still not resolved, please contact the supplier.

14.1 Inverter FAQ's

The Energydock Standard range has two different methods of communicating what the system is doing:

- the Victron inverter's LED screen functions provides information.
- the Victron Cerbo GX device will receive alarms.

For further information, please see the Victron Energy frequently asked questions web page (https://www.victronenergy.com/media/pg/VE.Bus_BMS_V2/en/frequently-asked-questions.html) for all the questions you need answered. Your service technician will be able to advise you how.

Manufactured by SPECIALIZED SOLAR SYSTEMS
43 Ossie Urban Street, Tamsui Industria, George, South Africa
+27 (0)44 878 1126 | www.specializedsolarsystems.co.za | info@specializedsolarsystems.co.za

14.2 Battery FAQ's

The battery screen is ON and the charge/discharge mosfets also indicate that they are ON and no alarm is active on the screen but there is no power on the loads.

1. Please ensure that the battery isolator is in the "ON" position.
2. Please check the status on page 2 of the touch screen, and see if the battery is in the "NORMAL" mode. If not, then...
3. Switch the battery ON/OFF and see if the unit reboots the software.
4. Phone your supplier if it does not reboot.

Can a battery cause a fire?

When it comes to households, $LiFePO_4$ batteries provide an added layer of safety due to their inherent stability. However, it is essential to note that improper handling, storage or charging could still pose a risk. Any electrical devices incorrectly used could pose a risk of fire.

What do I do if the battery is not communicating with the inverter or GX device?

After connecting the correct cables, reboot the GX device and/or the inverter. If this does not solve the problem, check the communication cable with an ohm tester and confirm that the cable connection is based on the PIN layout *(see page 9)*. If not, replace the cables as per PIN layout.

What happens if the individual battery cells become unbalanced?

Lithium batteries need to be charged to 100% state of charge in regular intervals. If the cells are unbalanced, recharge the battery and allow it to be charged to 100% for as long as possible. At this time, the cell balance should improve.

What happens when the discharge mosfet switches off (page 2 of the BMS touch screen)?

The common reason for this is that the amperage delivery has been exceeded. Reduce the load and reset the discharge mosfet to "ON". If this does not work, switch the BMS ON and OFF and let it reboot. The same will apply if the charge mosfet switches off.

When a fault SCP is indicated on the screen, what do I do?

This fault means that the BMS has gone into Short Circuit Protect (SCP) mode. There are times that a surge, potentially caused by lightning for example, goes through to the battery before the circuit breaker trips. At these times the BMS will protect the battery, and shut down.
Turn the main circuit breaker OFF and reboot the BMS. If this does not restore the BMS, your service technician will need to complete a "hard reboot" on this unit.

For any additional faults, please consult the "Troubleshooting Guide" on page 31 of the inverter manual, or please contact your registered service technician (as per page 1 of this document).

Manufactured by SPECIALIZED SOLAR SYSTEMS
43 Ossie Urban Street, Tamsui Industria, George, South Africa
+27 (0)44 878 1126 | www.specializedsolarsystems.co.za | info@specializedsolarsystems.co.za

SPECIALIZED SOLAR SYSTEMS QUALITY CONTROL & SIGN-OFF

PRODUCT NAME:	**STANDARD LEVEL 4**	ASSEMBLER NAME:	
SERIAL NUMBER:		QUALITY CONTROLLER NAME:	

CHECKLIST			
PASS	FIT & FINISH	QUALITY CONTROLLER INSPECTION	COMMENTS
	MAIN ASSEMBLY (Paint Finish, Structure, Rivets)		
	BATTERY COMPARTMENT LID		
	CIRCUIT BREAKER DIN RAIL & SSS COVER		
	INVERTER COMPARTMENT LID		
	MULTIPLUS INVERTER FIT		
	CIRCUIT BREAKERS DIN RAIL & SSS COVER		
	$LiFePO_4$ BATTERY MOUNT SECURE		
	COLOUR CONTROL GX		
	ALIGNMENTS		
SIGN OFF:		*DATE:*	
PASS	COMPONENTS	QUALITY CONTROLLER INSPECTION	COMMENTS
	MULTIPLUS II INVERTER 5kVA		
	INDICATOR LIGHTS		
	DOUBLE POLE CIRCUIT BREAKER 63A		
	COMMON EARTH BAR		
	AC1 OUTPUT: ESSENTIAL LOADS ONLY		
	AC2 OUTPUT: NON-ESSENTIAL LOADS		
	AC1 IN EARTH LEAKAGE		
	AC1 OUT DOUBLE POLE CIRCUIT BREAKER		
	AC2 OUT DOUBLE POLE CIRCUIT BREAKER		
	$LiFePO_4$ MAIN FUSE		
	INVERTER ON/OFF SWITCH		
	GROUND TO EARTH		
	$LiFePO_4$ BATTERY SENSOR		
	BMS MAINS ON/OFF		

Manufactured by SPECIALIZED SOLAR SYSTEMS
43 Ossie Urban Street, Tamsui Industria, George, South Africa
+27 (0)44 878 1126 | www.specializedsolarsystems.co.za | info@specializedsolarsystems.co.za

	COLOUR CONTROL GX		
	TRANSLATOR BOARD CAN-BUS		
	BATTERY BMS		
	INVERTER RJ45 CABLE		
	ENVIRONMENTAL TEMPERATURE SENSOR		
	BATTERY CELL MONITOR		
	FUSE HOLDERS		
	NEUTRAL / EARTH LINK		
SIGN OFF:		*DATE:*	
PASS	PROGRAMMING & COMMISSIONING Memory, Setup and Connectivity	QUALITY CONTROLLER INSPECTION	COMMENTS
	CCGX ON/OFF		
	BMS ON/OFF		
	INVERTER ON/OFF		
	SD CARD		
	WIFI NANO ADAPTER		
	CCGX CONFIG UPLOAD		
	VE.BUS FIRMWARE UPDATE		
	VE CONFIG UPLOAD		
	FORMWARE UPDATE – TRANSLATOR BOARD		
	BMS CONFIG UPLOAD		
	BMS UPDATE WITH PRODUCT SERIAL NUMBER		
	VRM ID PROFILE AND SETUP FOR WARRANTY		
SIGN OFF:		*DATE:*	
PASS	PERFORMANCE - DISCHARGE & CHARGE	QUALITY CONTROLLER INSPECTION	COMMENTS
	UPS MODE - AC DISCONNECTED (NON ESS/VS)		
	RESISTIVE LOAD 1700W DISCHARGE TO LVD		
	DISCHARGE TIME		
	DISCHARGE VOLTAGE LVD		
	RE-CHARGE TO 50% (AC Source 35A)		
SIGN OFF:		*DATE:*	

Manufactured by SPECIALIZED SOLAR SYSTEMS
43 Ossie Urban Street, Tamsui Industria, George, South Africa
+27 (0)44 878 1126 | www.specializedsolarsystems.co.za | info@specializedsolarsystems.co.za

PASS	SAFETY & LEGAL	QUALITY CONTROLLER INSPECTION	COMMENTS
	EARTH LEAKAGE TEST		
	BREAKER TEST		
	LABELS - AC, PV DC (if applicable & align)		
	QR CODE		
	EARTH RELAY TEST (INVERTER)		
SIGN OFF:		*DATE:*	
PASS	PACKAGING	QUALITY CONTROLLER INSPECTION	COMMENTS
	PACKAGING MATERIAL AND MOUNT		
	SHIPPING LIST		
	MANUAL – MULTIPLUS INVERTER		
	MANUAL – CCGX		
	PRODUCT SPECIFICATION BROCHURE		
	HANGER BRACKET KIT		
	QC LABEL		
	SPARE FUSE		
SIGN OFF:		*DATE:*	
FINAL SIGN-OFF AND APPROVAL			
	NAME OF COMMISSIONER:		
	DATE:		
	SIGN OFF:		

NOTE: PLEASE RETAIN THIS BOOKLET AS PROOF OF YOUR WARRANTY

For more information and videos, please scan the following QR code:

Manufactured by SPECIALIZED SOLAR SYSTEMS
43 Ossie Urban Street, Tamsui Industria, George, South Africa
+27 (0)44 878 1126 | www.specializedsolarsystems.co.za | info@specializedsolarsystems.co.za